Transformers

One of the main reasons that we use alternating AC voltages and currents in our homes and workplace's is that AC supplies can be easily generated at a convenient voltage, transformed (hence the name transformer) into much higher voltages and then distributed around the country using a national grid of pylons and cables over very long distances.

The reason for transforming the voltage to a much higher level is that higher distribution voltages implies lower currents for the same power and therefore lower I^2*R losses along the networked grid of cables. These higher AC transmission voltages and currents can then be reduced to a much lower, safer and usable voltage level where it can be used to supply electrical equipment in our homes and workplaces, and all this is possible thanks to the basic **Voltage Transformer**.

A Typical Voltage Transformer

The **Voltage Transformer** can be thought of as an electrical component rather than an electronic component. A transformer basically is very simple static (or stationary) electro-magnetic passive electrical device that works on the principle of Faraday's law of induction by converting electrical energy from one value to another.

The transformer does this by linking together two or more electrical circuits using a common oscillating magnetic circuit which is produced by the transformer itself. A transformer operates on the principals of “electromagnetic induction”, in the form of Mutual Induction.

Mutual induction is the process by which a coil of wire magnetically induces a voltage into another coil located in close proximity to it. Then we can say that transformers work in the “magnetic domain”, and transformers get their name from the fact that they “transform” one voltage or current level into another.

Transformers are capable of either increasing or decreasing the voltage and current levels of their supply, without modifying its frequency, or the amount of electrical power being transferred from one winding to another via the magnetic circuit.

A single phase voltage transformer basically consists of two electrical coils of wire, one called the “Primary Winding” and another called the “Secondary Winding”. For this tutorial we will define the “primary” side of the transformer as the side that usually takes power, and the “secondary” as the side that usually delivers power. In a single-phase voltage transformer the primary is usually the side with the higher voltage.

These two coils are not in electrical contact with each other but are instead wrapped together around a common closed magnetic iron circuit called the “core”. This soft iron core is not solid but made up of individual laminations connected together to help reduce the core’s losses.

The two coil windings are electrically isolated from each other but are magnetically linked through the common core allowing electrical power to be transferred from one coil to the other. When an electric current passed through the primary winding, a

magnetic field is developed which induces a voltage into the secondary winding as shown.

Single Phase Voltage Transformer

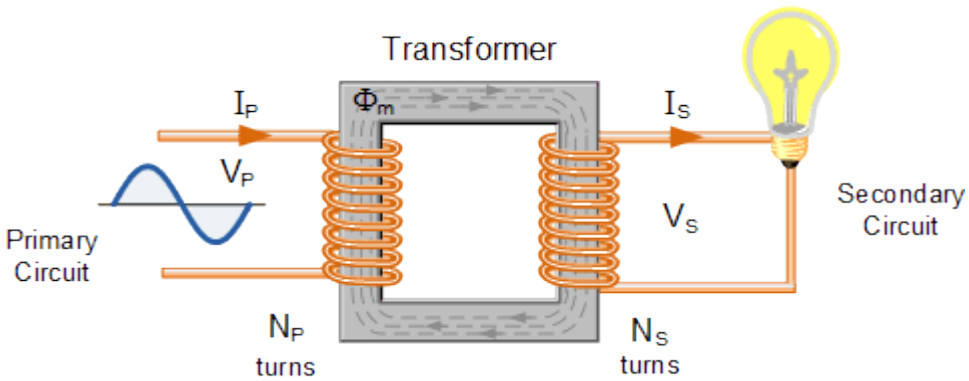

In other words, for a transformer there is no direct electrical connection between the two coil windings, thereby giving it the name also of an **Isolation Transformer**. Generally, the primary winding of a transformer is connected to the input voltage supply and converts or transforms the electrical power into a magnetic field. While the job of the secondary winding is to convert this alternating magnetic field into electrical power producing the required output voltage as shown.

Transformer Construction (single-phase)

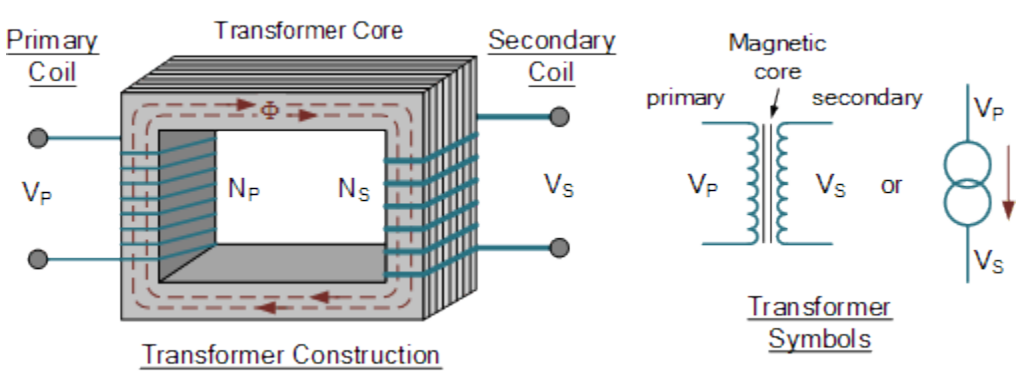

- Where:
- V_P – is the Primary Voltage
- V_S – is the Secondary Voltage

- N_P – is the Number of Primary Windings
- N_S – is the Number of Secondary Windings
- Φ (phi) – is the Flux Linkage

Notice that the two coil windings are not electrically connected but are only linked magnetically. A single-phase transformer can operate to either increase or decrease the voltage applied to the primary winding. When a transformer is used to “increase” the voltage on its secondary winding with respect to the primary, it is called a **Step-up transformer**. When it is used to “decrease” the voltage on the secondary winding with respect to the primary it is called a **Step-down transformer**.

However, a third condition exists in which a transformer produces the same voltage on its secondary as is applied to its primary winding. In other words, its output is identical with respect to voltage, current and power transferred. This type of transformer is called an “Impedance Transformer” and is mainly used for impedance matching or the isolation of adjoining electrical circuits.

The difference in voltage between the primary and the secondary windings is achieved by changing the number of coil turns in the primary winding (N_P) compared to the number of coil turns on the secondary winding (N_S).

As the transformer is basically a linear device, a ratio now exists between the number of turns of the primary coil divided by the number of turns of the secondary coil. This ratio, called the ratio of transformation, more commonly known as a transformers “turns ratio”, (TR). This turns ratio value dictates the operation of the transformer and the corresponding voltage available on the secondary winding.

It is necessary to know the ratio of the number of turns of wire on the primary winding compared to the secondary winding. The

turns ratio, which has no units, compares the two windings in order and is written with a colon, such as 3:1 (3-to-1). This means in this example, that if there are 3 volts on the primary winding there will be 1 volt on the secondary winding, 3 volts-to-1 volt. Then we can see that if the ratio between the number of turns changes the resulting voltages must also change by the same ratio, and this is true.

Transformers are all about “ratios”. The ratio of the primary to the secondary, the ratio of the input to the output, and the turns ratio of any given transformer will be the same as its voltage ratio. In other words for a transformer: “turns ratio = voltage ratio”. The actual number of turns of wire on any winding is generally not important, just the turns ratio and this relationship is given as:

A Transformers Turns Ratio

$$\frac{N_P}{N_S} = \frac{V_P}{V_S} = n = \text{Turns Ratio}$$

Assuming an ideal transformer and the phase angles: $\Phi_P \equiv \Phi_S$

Note that the order of the numbers when expressing a transformers *turns ratio* value is very important as the turns ratio 3:1 expresses a very different transformer relationship and output voltage than one in which the turns ratio is given as: 1:3.

Transformer Basics Example No1

A voltage transformer has 1500 turns of wire on its primary coil and 500 turns of wire for its secondary coil. What will be the turns ratio (TR) of the transformer.

$$\text{T.R.} = \frac{N_P}{N_S} = \frac{\#\text{Pri. Coils}}{\#\text{Sec. Coils}} = \frac{1500}{500} = \frac{3}{1} = 3:1$$

This ratio of 3:1 (3-to-1) simply means that there are three primary windings for every one secondary winding. As the ratio moves from a larger number on the left to a smaller number on the right, the primary voltage is therefore stepped down in value as shown.

Transformer Basics Example No2

If 240 volts rms is applied to the primary winding of the same transformer above, what will be the resulting secondary no load voltage.

$$\text{T.R.} = 3{:}1 \text{ or } \frac{3}{1} = \frac{V_P}{V_S} = \frac{\#\text{Pri. Volts}}{\#\text{Sec. Volts}} = \frac{240}{V_S}$$

$$\therefore \text{Sec. Volts, } V_S = \frac{V_P}{3} = \frac{240}{3} = 80 \text{ volts}$$

Again confirming that the transformer is a “step-down” transformer as the primary voltage is 240 volts and the corresponding secondary voltage is lower at 80 volts.

Then the main purpose of a transformer is to transform voltages at preset ratios and we can see that the primary winding has a set amount or number of windings (coils of wire) on it to suit the input voltage. If the secondary output voltage is to be the same value as the input voltage on the primary winding, then the same number of coil turns must be wound onto the secondary core as there are on the primary core giving an even turns ratio of 1:1 (1-to-1). In other words, one coil turn on the secondary to one coil turn on the primary.

If the output secondary voltage is to be greater or higher than the input voltage, (step-up transformer) then there must be more turns on the secondary giving a turns ratio of 1:N (1-to-N), where N represents the turns ratio number. Likewise, if it is required that the secondary voltage is to be lower or less than the primary, (step-down transformer) then the number of secondary windings must be less giving a turns ratio of N:1 (N-to-1).

Transformer Action

We have seen that the number of coil turns on the secondary winding compared to the primary winding, the turns ratio, affects the amount of voltage available from the secondary coil. But if the two windings are electrically isolated from each other, how is this secondary voltage produced?

We have said previously that a transformer basically consists of two coils wound around a common soft iron core. When an alternating voltage (V_P) is applied to the primary coil, current flows through the coil which in turn sets up a magnetic field around itself, called *mutual inductance*, by this current flow according to *Faraday's Law* of electromagnetic induction. The strength of the magnetic field builds up as the current flow rises from zero to its maximum value which is given as $d\Phi/dt$.

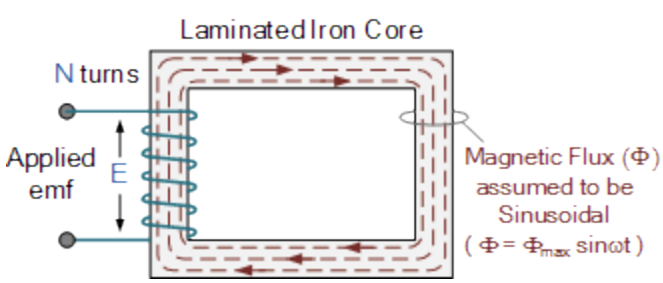

As the magnetic lines of force setup by this electromagnet expand outward from the coil the soft iron core forms a path for and concentrates the magnetic flux. This magnetic flux links the turns

of both windings as it increases and decreases in opposite directions under the influence of the AC supply.

However, the strength of the magnetic field induced into the soft iron core depends upon the amount of current and the number of turns in the winding. When current is reduced, the magnetic field strength reduces.

When the magnetic lines of flux flow around the core, they pass through the turns of the secondary winding, causing a voltage to be induced into the secondary coil. The amount of voltage induced will be determined by: $N*d\Phi/dt$ (Faraday's Law), where N is the number of coil turns. Also this induced voltage has the same frequency as the primary winding voltage.

Then we can see that the same voltage is induced in each coil turn of both windings because the same magnetic flux links the turns of both the windings together. As a result, the total induced voltage in each winding is directly proportional to the number of turns in that winding. However, the peak amplitude of the output voltage available on the secondary winding will be reduced if the magnetic losses of the core are high.

If we want the primary coil to produce a stronger magnetic field to overcome the cores magnetic losses, we can either send a larger current through the coil, or keep the same current flowing, and instead increase the number of coil turns (N_P) of the winding. The product of amperes times turns is called the "ampere-turns", which determines the magnetising force of the coil.

So assuming we have a transformer with a single turn in the primary, and only one turn in the secondary. If one volt is applied to the one turn of the primary coil, assuming no losses, enough current must flow and enough magnetic flux generated to induce one volt in the single turn of the secondary. That is, each winding supports the same number of volts per turn.

As the magnetic flux varies sinusoidally, $\Phi = \Phi_{max} \sin\omega t$, then the basic relationship between induced emf, (E) in a coil winding of N turns is given by:

emf = turns x rate of change

$$E = N\frac{d\Phi}{dt}$$

$$E = N \times \omega \times \Phi_{max} \times \cos(\omega t)$$

$$E_{max} = N\omega\Phi_{max}$$

$$E_{rms} = \frac{N\omega}{\sqrt{2}} \times \Phi_{max} = \frac{2\pi}{\sqrt{2}} \times f \times N \times \Phi_{max}$$

$$\therefore E_{rms} = 4.44 f N \Phi_{max}$$

- Where:
- f – is the flux frequency in Hertz, $= \omega/2\pi$
- N – is the number of coil windings.
- Φ – is the amount of flux in webers

This is known as the **Transformer EMF Equation**. For the primary winding emf, N will be the number of primary turns, (N_P) and for the secondary winding emf, N will be the number of secondary turns, (N_S).

Also please note that as transformers require an alternating magnetic flux to operate correctly, transformers cannot therefore be used to transform or supply DC voltages or currents, since the magnetic field must be changing to induce a voltage in the secondary winding. In other words, **transformers DO NOT**

operate on steady state DC voltages, only alternating or pulsating voltages.

If a transformers primary winding was connected to a DC supply, the inductive reactance of the winding would be zero as DC has no frequency, so the effective impedance of the winding will therefore be very low and equal only to the resistance of the copper used. Thus the winding will draw a very high current from the DC supply causing it to overheat and eventually burn out, because as we know I = V/R.

Transformer Basics Example No3

A single phase transformer has 480 turns on the primary winding and 90 turns on the secondary winding. The maximum value of the magnetic flux density is 1.1T when 2200 volts, 50Hz is applied to the transformer primary winding. Calculate:

a). The maximum flux in the core.

$$E_{rms} = \frac{N\omega}{\sqrt{2}}\Phi_{max}$$

$$\Phi_{max} = \frac{E_{rms}}{N\omega} \times \sqrt{2} = \frac{2200}{480 \times 2\pi \times 50} \times \sqrt{2}$$

$$\therefore \Phi_{max} = 0.0206\,Wb \text{ or } 20.6\,mWb$$

b). The cross-sectional area of the core.

$$\Phi_{max} = \beta \times A$$

$$\therefore A = \frac{\Phi_{max}}{\beta} = \frac{0.0206}{1.1} = 0.0187m^2$$

c). The secondary induced emf.

$$T.R. = \frac{V_P}{V_S} = \frac{N_P}{N_S}$$

$$\therefore V_S = \frac{V_P \times N_S}{N_P} = \frac{2200 \times 90}{480} = 412.5\,Volts$$

Electrical Power in a Transformer

Another one of the transformer basics parameters is its power rating. The power rating of a transformer is obtained by simply multiplying the current by the voltage to obtain a rating in **Volt-amperes**, (VA). Small single phase transformers may be rated in volt-amperes only, but much larger power transformers are rated in units of **Kilo volt-amperes**, (kVA) where 1 kilo volt-ampere is equal to 1,000 volt-amperes, and units of **Mega volt-amperes**, (MVA) where 1 mega volt-ampere is equal to 1 million volt-amperes.

In an ideal transformer (ignoring any losses), the power available in the secondary winding will be the same as the power in the primary winding, they are constant wattage devices and do not change the power only the voltage to current ratio. Thus, in an ideal transformer the **Power Ratio** is equal to one (unity) as the voltage, V multiplied by the current, I will remain constant.

That is the electric power at one voltage/current level on the primary is “transformed” into electric power, at the same frequency, to the same voltage/current level on the secondary side. Although the transformer can step-up (or step-down) voltage, it cannot step-up power. Thus, when a transformer steps-up a voltage, it steps-down the current and vice-versa, so that the output power is always at the same value as the input power. Then we can say that primary power equals secondary power, ($P_P = P_S$).

Power in a Transformer

$$\text{Power}_{\text{Primary}} = \text{Power}_{\text{Secondary}}$$

$$P_{(PRIM)} = P_{(SEC)} = V_P I_P \cos\theta_P = V_S I_S \cos\theta_S$$

Where: Φ_P is the primary phase angle and Φ_S is the secondary phase angle.

Note that since power loss is proportional to the square of the current being transmitted, that is: I^2R, increasing the voltage, let’s say doubling (×2) the voltage would decrease the current by the same amount, (÷2) while delivering the same amount of power to the load and therefore reducing losses by factor of 4. If the voltage was increased by a factor of 10, the current would decrease by the same factor reducing overall losses by factor of 100.

Transformer Basics – Efficiency

A transformer does not require any moving parts to transfer energy. This means that there are no friction or windage losses associated with other electrical machines. However, transformers

do suffer from other types of losses called “copper losses” and “iron losses” but generally these are quite small.

Copper losses, also known as I^2R loss is the electrical power which is lost in heat as a result of circulating the currents around the transformers copper windings, hence the name. Copper losses represents the greatest loss in the operation of a transformer. The actual watts of power lost can be determined (in each winding) by squaring the amperes and multiplying by the resistance in ohms of the winding (I^2R).

Iron losses, also known as hysteresis is the lagging of the magnetic molecules within the core, in response to the alternating magnetic flux. This lagging (or out-of-phase) condition is due to the fact that it requires power to reverse magnetic molecules; they do not reverse until the flux has attained sufficient force to reverse them.

Their reversal results in friction, and friction produces heat in the core which is a form of power loss. Hysteresis within the transformer can be reduced by making the core from special steel alloys.

The intensity of power loss in a transformer determines its efficiency. The efficiency of a transformer is reflected in power (wattage) loss between the primary (input) and secondary (output) windings. Then the resulting efficiency of a transformer is equal to the ratio of the power output of the secondary winding, P_S to the power input of the primary winding, P_P and is therefore high.

An ideal transformer is 100% efficient because it delivers all the energy it receives. Real transformers on the other hand are not 100% efficient and at full load, the efficiency of a transformer is between 94% to 96% which is quiet good. For a transformer operating with a constant voltage and frequency with a very high

capacity, the efficiency may be as high as 98%. The efficiency, η of a transformer is given as:

Transformer Efficiency

$$\text{efficiency, } \eta = \frac{\text{Output Power}}{\text{Input Power}} \times 100\%$$

$$= \frac{\text{Input Power - Losses}}{\text{Input Power}} \times 100\%$$

$$= 1 - \frac{\text{Losses}}{\text{Input Power}} \times 100\%$$

Where: Input, Output and Losses are all expressed in units of power.

Generally when dealing with transformers, the primary watts are called “volt-amps”, **VA** to differentiate them from the secondary watts. Then the efficiency equation above can be modified to:

$$\text{Efficiency, } \eta = \frac{\text{Secondary Watts (Output)}}{\text{Primary VA (Input)}}$$

It is sometimes easier to remember the relationship between the transformers input, output and efficiency by using pictures. Here the three quantities of VA, W and η have been superimposed into a triangle giving power in watts at the top with volt-amps and efficiency at the bottom. This arrangement represents the actual position of each quantity in the efficiency formulas.

Transformer Efficiency Triangle

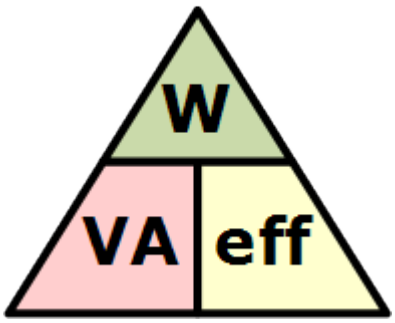

and transposing the above triangle quantities gives us the following combinations of the same equation:

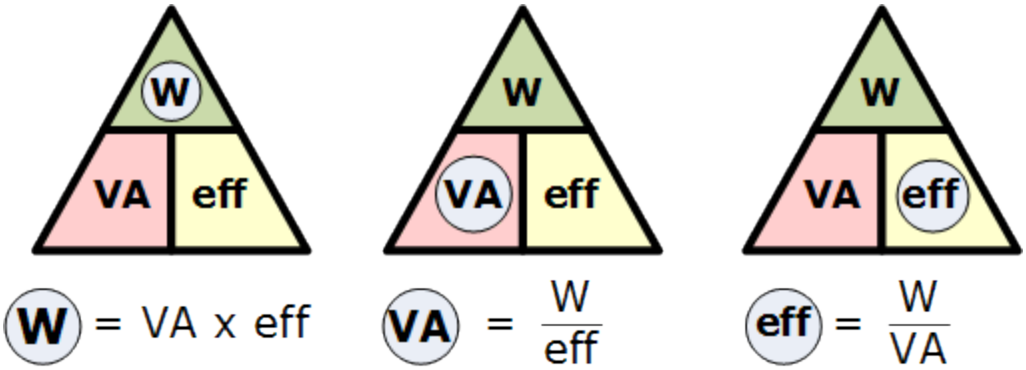

Then, to find Watts (output) = VA x eff., or to find VA (input) = W/eff., or to find Efficiency, eff. = W/VA, etc.

Transformer Basics Summary

Then to summarise this transformer basics tutorial. A **Transformer** changes the voltage level (or current level) on its input winding to another value on its output winding using a magnetic field. A transformer consists of two electrically isolated coils and operates on Faraday's principal of "mutual induction", in which an EMF is induced in the transformers secondary coil by the magnetic flux generated by the voltages and currents flowing in the primary coil winding.

Both the primary and secondary coil windings are wrapped around a common soft iron core made of individual laminations to reduce eddy current and power losses. The primary winding of the transformer is connected to the AC power source which must be sinusoidal in nature, while the secondary winding supplies electrical power to the load. Having said that, a transformer could be used in reverse with the supply connected to the secondary winding provided the voltage and current ratings are observed.

We can represent the transformer in block diagram form as follows:

Basic Representation of the Transformer

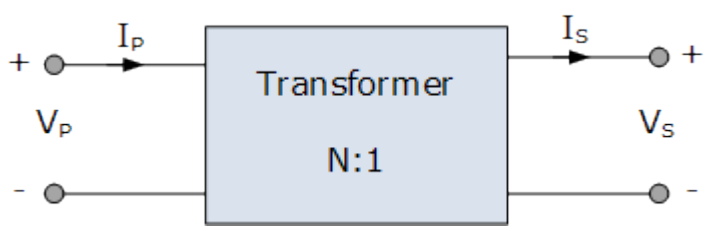

The ratio of the transformers primary and secondary windings with respect to each other produces either a step-up voltage transformer or a step-down voltage transformer with the ratio between the number of primary turns to the number of secondary turns being called the “turns ratio” or “transformer ratio”.

If this ratio is less than unity, $n < 1$ then N_S is greater than N_P and the transformer is classed as a step-up transformer. If this ratio is greater than unity, $n > 1$, that is N_P is greater than N_S, the transformer is classed as a step-down transformer. Note that single phase step-down transformer can also be used as a step-up transformer simply by reversing its connections and making the low voltage winding its primary, and vice versa as long as the transformer is operated within its original VA design rating.

If the turns ratio is equal to unity, that is $n = 1$, then both the primary and secondary have the same number of coil turns so therefore the voltages and currents will be the same for both the primary and secondary windings.

This type of 1:1 transformer is classed as an isolation transformer as both the primary and secondary windings of the transformer have the same number of volts per turn. The efficiency of a transformer is the ratio of the power it delivers to the load to the power it absorbs from the supply. In an ideal transformer there are no losses so no loss of power then $P_{IN} = P_{OUT}$.

Full wave Rectifier

In the previous Power Diodes tutorial we discussed ways of reducing the ripple or voltage variations on a direct DC voltage by connecting smoothing capacitors across the load resistance.

While this method may be suitable for low power applications it is unsuitable to applications which need a “steady and smooth” DC supply voltage. One method to improve on this is to use every half-cycle of the input voltage instead of every other half-cycle. The circuit which allows us to do this is called a **Full Wave Rectifier**.

Like the half wave circuit, a full wave rectifier circuit produces an output voltage or current which is purely DC or has some specified DC component. Full wave rectifiers have some fundamental advantages over their half wave rectifier counterparts. The average (DC) output voltage is higher than for half wave, the output of the full wave rectifier has much less ripple than that of the half wave rectifier producing a smoother output waveform.

In a **Full Wave Rectifier** circuit two diodes are now used, one for each half of the cycle. A multiple winding transformer is used whose secondary winding is split equally into two halves with a common centre tapped connection, (C). This configuration results in each diode conducting in turn when its anode terminal is positive with respect to the transformer centre point C producing an output during both half-cycles, twice that for the half wave rectifier so it is 100% efficient as shown below.

Full Wave Rectifier Circuit

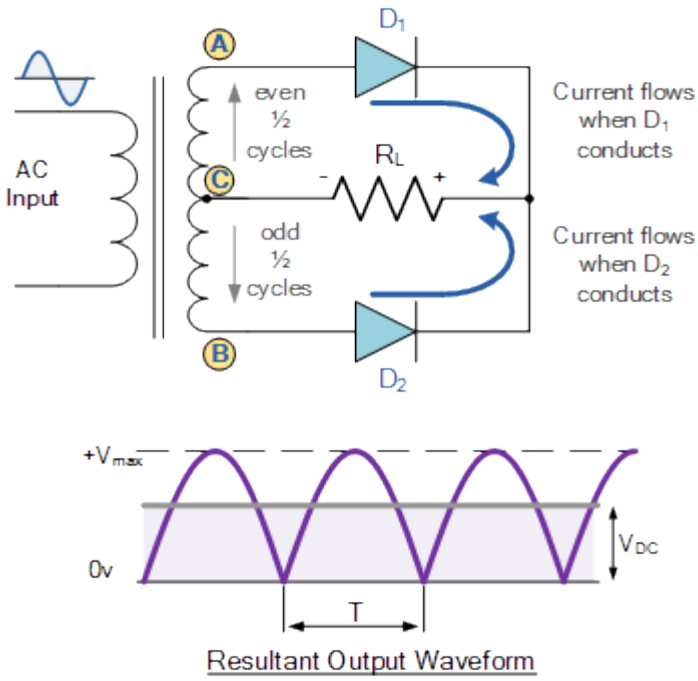

The full wave rectifier circuit consists of two *power diodes* connected to a single load resistance (R_L) with each diode taking it in turn to supply current to the load. When point A of the transformer is positive with respect to point C, diode D_1 conducts in the forward direction as indicated by the arrows.

When point B is positive (in the negative half of the cycle) with respect to point C, diode D_2 conducts in the forward direction and the current flowing through resistor R is in the same direction for both half-cycles. As the output voltage across the resistor R is the phasor sum of the two waveforms combined, this type of full wave rectifier circuit is also known as a “bi-phase” circuit.

We can see this affect quite clearly if we run the circuit in the Partsim Simulator Circuit with the smoothing capacitor removed.

Partsim Simulation Waveform

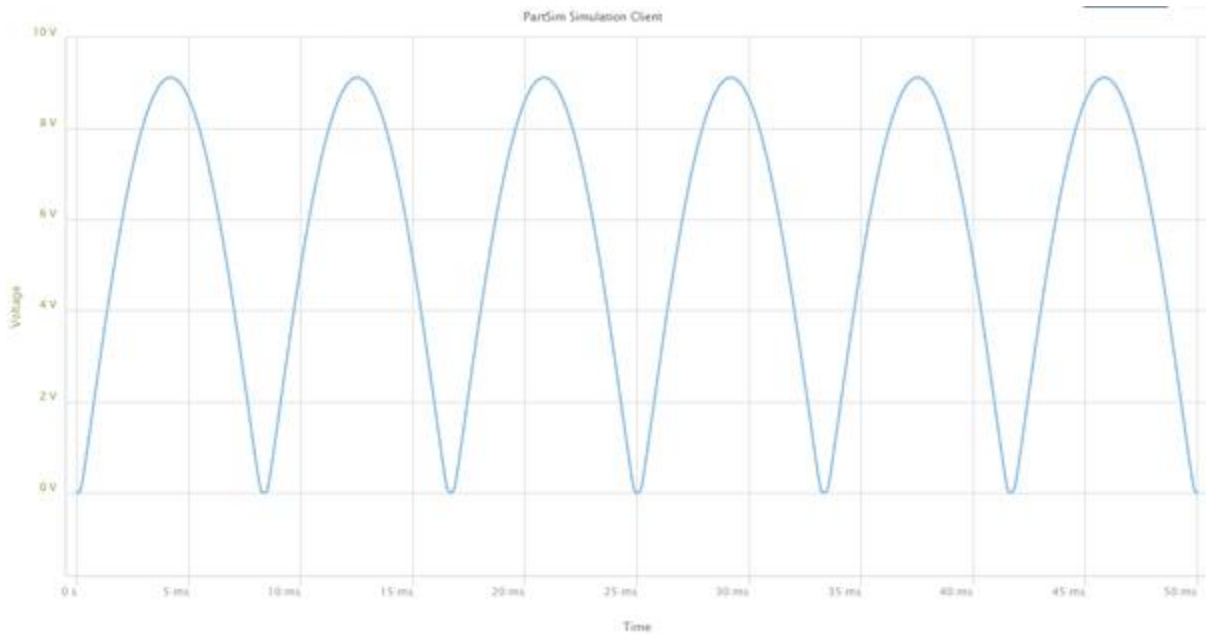

As the spaces between each half-wave developed by each diode is now being filled in by the other diode the average DC output voltage across the load resistor is now double that of the single half-wave rectifier circuit and is about $0.637V_{max}$ of the peak voltage, assuming no losses.

$$V_{d.c.} = \frac{2V_{\max}}{\pi} = 0.637V_{\max} = 0.9V_{RMS}$$

Where: V_{MAX} is the maximum peak value in one half of the secondary winding and V_{RMS} is the rms value.

The peak voltage of the output waveform is the same as before for the half-wave rectifier provided each half of the transformer windings have the same rms voltage value. To obtain a different DC voltage output different transformer ratios can be used.

The main disadvantage of this type of full wave rectifier circuit is that a larger transformer for a given power output is required with two separate but identical secondary windings making this type of full wave rectifying circuit costly compared to the “Full Wave Bridge Rectifier” circuit equivalent.

The Full Wave Bridge Rectifier

Another type of circuit that produces the same output waveform as the full wave rectifier circuit above, is that of the **Full Wave Bridge Rectifier**. This type of single phase rectifier uses four individual rectifying diodes connected in a closed loop “bridge” configuration to produce the desired output.

The main advantage of this bridge circuit is that it does not require a special centre tapped transformer, thereby reducing its size and cost. The single secondary winding is connected to one side of the diode bridge network and the load to the other side as shown below.

The Diode Bridge Rectifier

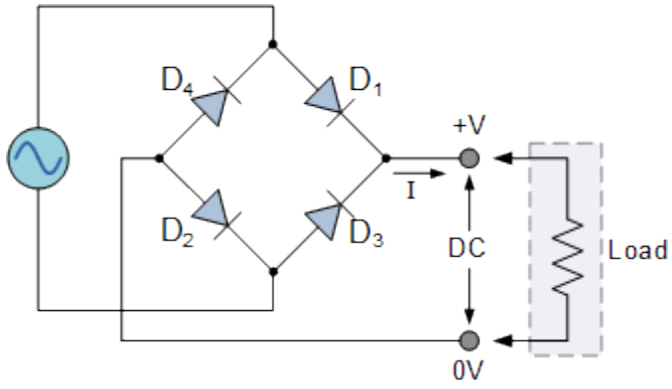

The four diodes labelled D_1 to D_4 are arranged in “series pairs” with only two diodes conducting current during each half cycle. During the positive half cycle of the supply, diodes D1 and D2

conduct in series while diodes D3 and D4 are reverse biased and the current flows through the load as shown below.

The Positive Half-cycle

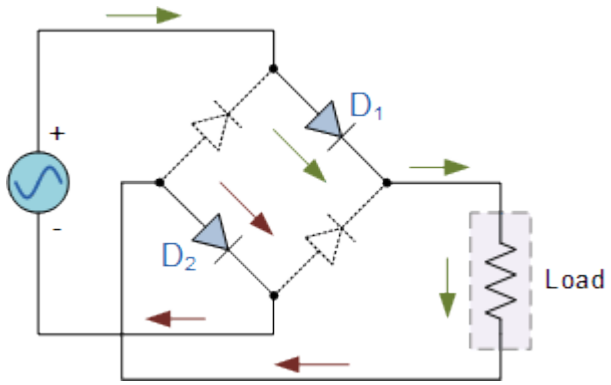

During the negative half cycle of the supply, diodes D3 and D4 conduct in series, but diodes D1 and D2 switch “OFF” as they are now reverse biased. The current flowing through the load is the same direction as before.

The Negative Half-cycle

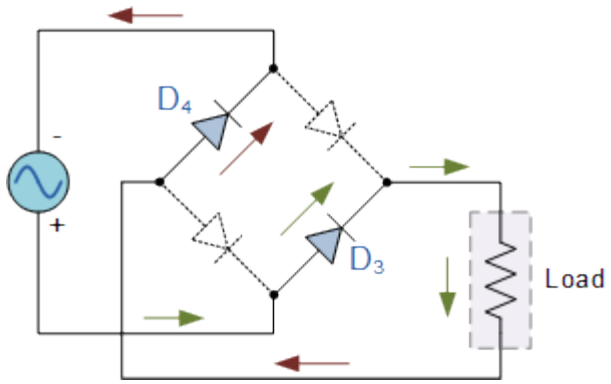

As the current flowing through the load is unidirectional, so the voltage developed across the load is also unidirectional the same

as for the previous two diode full-wave rectifier, therefore the average DC voltage across the load is $0.637V_{max}$.

Typical Bridge Rectifier

However in reality, during each half cycle the current flows through two diodes instead of just one so the amplitude of the output voltage is two voltage drops (2*0.7 = 1.4V) less than the input V_{MAX} amplitude. The ripple frequency is now twice the supply frequency (e.g. 100Hz for a 50Hz supply or 120Hz for a 60Hz supply.)

Although we can use four individual power diodes to make a full wave bridge rectifier, pre-made bridge rectifier components are available “off-the-shelf” in a range of different voltage and current sizes that can be soldered directly into a PCB circuit board or be connected by spade connectors.

The image to the right shows a typical single phase bridge rectifier with one corner cut off. This cut-off corner indicates that the terminal nearest to the corner is the positive or +ve output terminal or lead with the opposite (diagonal) lead being the negative or -ve output lead. The other two connecting leads are for the input alternating voltage from a transformer secondary winding.

The Smoothing Capacitor

We saw in the previous section that the single phase half-wave rectifier produces an output wave every half cycle and that it was not practical to use this type of circuit to produce a steady DC supply. The full-wave bridge rectifier however, gives us a greater mean DC value (0.637 Vmax) with less superimposed ripple while the output waveform is twice that of the frequency of the input supply frequency.

We can improve the average DC output of the rectifier while at the same time reducing the AC variation of the rectified output by using smoothing capacitors to filter the output waveform. Smoothing or reservoir capacitors connected in parallel with the load across the output of the full wave bridge rectifier circuit increases the average DC output level even higher as the capacitor acts like a storage device as shown below.

Full-wave Rectifier with Smoothing Capacitor

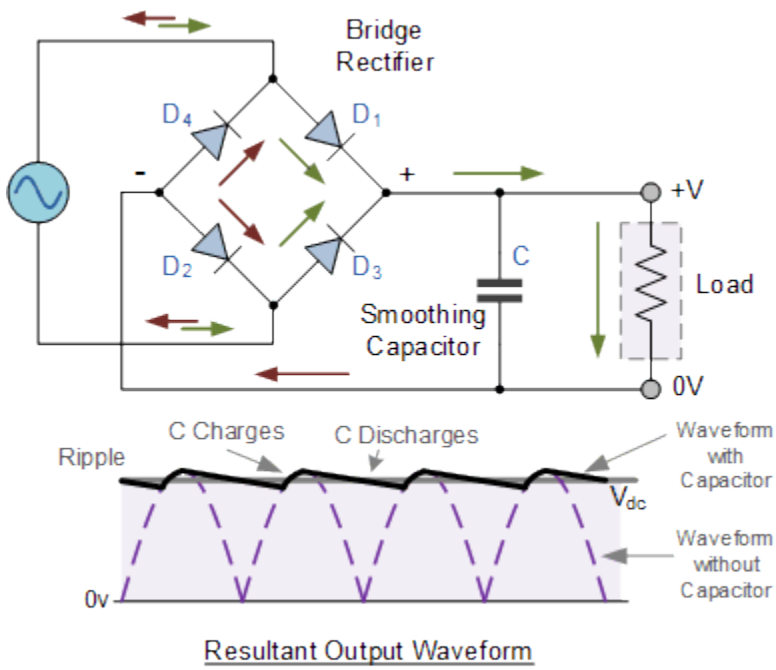

The smoothing capacitor converts the full-wave rippled output of the rectifier into a more smooth DC output voltage. If we now run

the Partsim Simulator Circuit with different values of smoothing capacitor installed, we can see the effect it has on the rectified output waveform as shown.

5uF Smoothing Capacitor

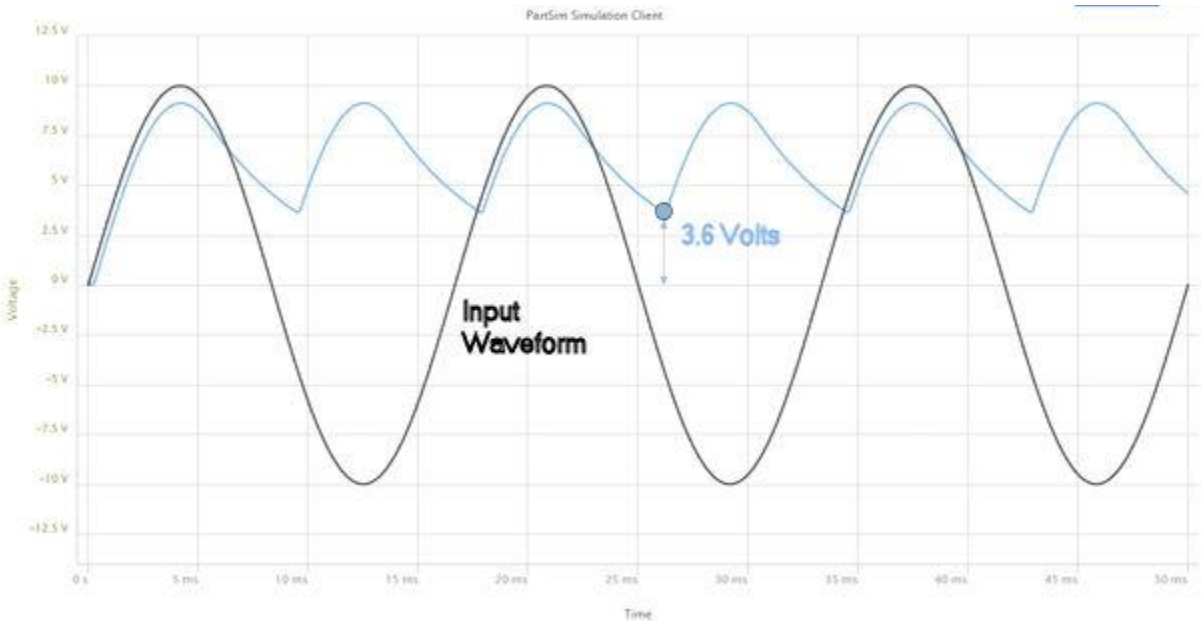

The blue plot on the waveform shows the result of using a 5.0uF smoothing capacitor across the rectifiers output. Previously the load voltage followed the rectified output waveform down to zero volts. Here the 5uF capacitor is charged to the peak voltage of the output DC pulse, but when it drops from its peak voltage back down to zero volts, the capacitor can not discharge as quickly due to the RC time constant of the circuit.

This results in the capacitor discharging down to about 3.6 volts, in this example, maintaining the voltage across the load resistor until the capacitor re-charges once again on the next positive slope of the DC pulse. In other words, the capacitor only has time to discharge briefly before the next DC pulse recharges it back up to the peak value. Thus, the DC voltage applied to the load

resistor drops only by a small amount. But we can improve this still by increasing the value of the smoothing capacitor as shown.

50uF Smoothing Capacitor

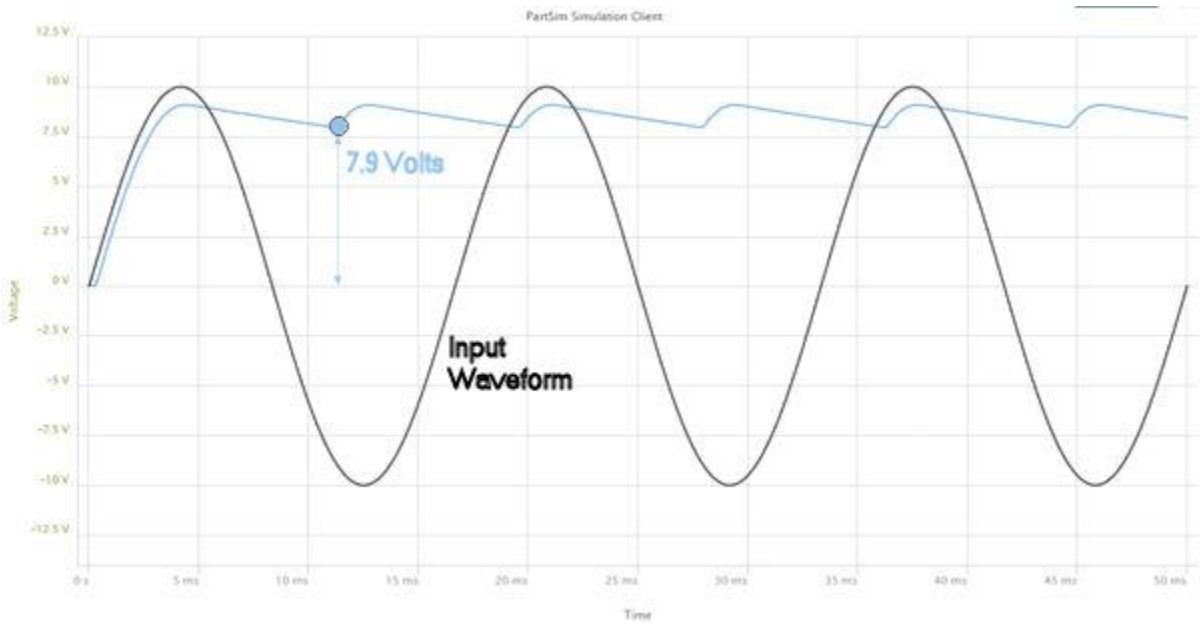

Here we have increased the value of the smoothing capacitor ten-fold from 5uF to 50uF which has reduced the ripple increasing the minimum discharge voltage from the previous 3.6 volts to 7.9 volts. However, using the Partsim Simulator Circuit we have chosen a load of 1kΩ to obtain these values, but as the load impedance decreases the load current increases causing the capacitor to discharge more rapidly between charging pulses.

The effect of a supplying a heavy load with a single smoothing or reservoir capacitor can be reduced by the use of a larger capacitor which stores more energy and discharges less between charging pulses. Generally for DC power supply circuits the smoothing capacitor is an Aluminium Electrolytic type that has a capacitance value of 100uF or more with repeated DC voltage pulses from the rectifier charging up the capacitor to peak voltage.

However, there are two important parameters to consider when choosing a suitable smoothing capacitor and these are its *Working Voltage*, which must be higher than the no-load output value of the rectifier and its *Capacitance Value*, which determines the amount of ripple that will appear superimposed on top of the DC voltage.

Too low a capacitance value and the capacitor has little effect on the output waveform. But if the smoothing capacitor is sufficiently large enough (parallel capacitors can be used) and the load current is not too large, the output voltage will be almost as smooth as pure DC. As a general rule of thumb, we are looking to have a ripple voltage of less than 100mV peak to peak.

The maximum ripple voltage present for a **Full Wave Rectifier** circuit is not only determined by the value of the smoothing capacitor but by the frequency and load current, and is calculated as:

Bridge Rectifier Ripple Voltage

$$V_{(ripple)} = \frac{I_{(load)}}{f \times C}, \text{ Volts}$$

Where: I is the DC load current in amps, f is the frequency of the ripple or twice the input frequency in Hertz, and C is the capacitance in Farads.

The main advantages of a full-wave bridge rectifier is that it has a smaller AC ripple value for a given load and a smaller reservoir or smoothing capacitor than an equivalent half-wave rectifier. Therefore, the fundamental frequency of the ripple voltage is twice that of the AC supply frequency (100Hz) where for the half-wave rectifier it is exactly equal to the supply frequency (50Hz).

The amount of ripple voltage that is superimposed on top of the DC supply voltage by the diodes can be virtually eliminated by adding a much improved π-filter (pi-filter) to the output terminals of the bridge rectifier. This type of low-pass filter consists of two smoothing capacitors, usually of the same value and a choke or inductance across them to introduce a high impedance path to the alternating ripple component

Another more practical and cheaper alternative is to use an off the shelf 3-terminal voltage regulator IC, such as a LM78xx (where "xx" stands for the output voltage rating) for a positive output voltage or its inverse equivalent the LM79xx for a negative output voltage which can reduce the ripple by more than 70dB (Datasheet) while delivering a constant output current of over 1 amp.

Why not test your knowledge about full wave rectifier circuits using the Partsim Simulator Tool today. Try different values of smoothing capacitor and load resistance in your circuit to see the effects on the output waveform.

Half wave rectifier

Half Wave Rectification

A rectifier is a circuit which converts the *Alternating Current* (AC) input power into a *Direct Current* (DC) output power. The input power supply may be either a single-phase or a multi-phase supply with the simplest of all the rectifier circuits being that of the **Half Wave Rectifier**.

The power diode in a half wave rectifier circuit passes just one half of each complete sine wave of the AC supply in order to convert it into a DC supply. Then this type of circuit is called a

“half-wave” rectifier because it passes only half of the incoming AC power supply as shown below.

Half Wave Rectifier Circuit

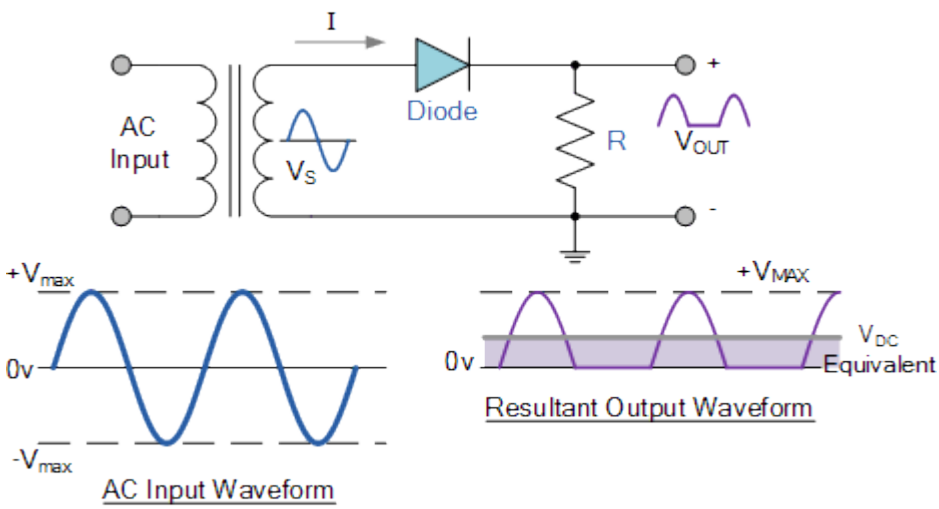

During each “positive” half cycle of the AC sine wave, the diode is *forward biased* as the anode is positive with respect to the cathode resulting in current flowing through the diode.

Since the DC load is resistive (resistor, R), the current flowing in the load resistor is therefore proportional to the voltage (Ohm´s Law), and the voltage across the load resistor will therefore be the same as the supply voltage, Vs (minus V*f*), that is the “DC” voltage across the load is sinusoidal for the first half cycle only so Vout = Vs.

During each “negative” half cycle of the AC sinusoidal input waveform, the diode is *reverse biased* as the anode is negative with respect to the cathode. Therefore, NO current flows through the diode or circuit. Then in the negative half cycle of the supply, no current flows in the load resistor as no voltage appears across it so therefore, Vout = 0.

The current on the DC side of the circuit flows in one direction only making the circuit **Unidirectional**. As the load resistor

receives from the diode a positive half of the waveform, zero volts, a positive half of the waveform, zero volts, etc, the value of this irregular voltage would be equal in value to an equivalent DC voltage of 0.318*Vmax of the input sinusoidal waveform or 0.45*Vrms of the input sinusoidal waveform.

Then the equivalent DC voltage, V_{DC} across the load resistor is calculated as follows.

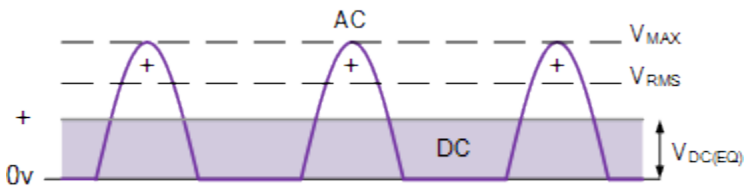

Rectified Output Waveform

$$V_{d.c.} = \frac{V_{max}}{\pi} = 0.318V_{max} = 0.45V_S$$

V_{DC} and the current I_{DC}, flowing through a 100Ω resistor connected to a 240 Vrms single phase half-wave rectifier as shown above. Also calculate the DC power consumed by the load.

$$V_{MAX} = V_{RMS} \times 1.414, \quad \text{or} \quad V_{RMS} = V_{MAX} \times 0.7071$$

$$V_{DC} = 0.45V_{RMS} = 0.45 \times 240 = 108 \text{ Volts}$$

or

$$V_{DC} = 0.318V_{MAX} = 0.318 \times (240 \times 1.414) = 108 \text{ Volts}$$

$$I_{DC} = \frac{V_{DC}}{R} = \frac{108V}{100\Omega} = 1.08 \text{ Amps}$$

$$\text{Power} = I^2 R = 1.08^2 \times 100 = 116 \text{ Watts}$$

During the rectification process the resultant output DC voltage and current are therefore both “ON” and “OFF” during every cycle. As the voltage across the load resistor is only present during the positive half of the cycle (50% of the input waveform), this results in a low average DC value being supplied to the load.

The variation of the rectified output waveform between this “ON” and “OFF” condition produces a waveform which has large amounts of “ripple” which is an undesirable feature. The resultant DC ripple has a frequency that is equal to that of the AC supply frequency.

Very often when rectifying an alternating voltage we wish to produce a “steady” and continuous DC voltage free from any voltage variations or ripple. One way of doing this is to connect a large value Capacitor across the output voltage terminals in parallel with the load resistor as shown below. This type of capacitor is known commonly as a “Reservoir” or *Smoothing Capacitor*.

Half-wave Rectifier with Smoothing Capacitor

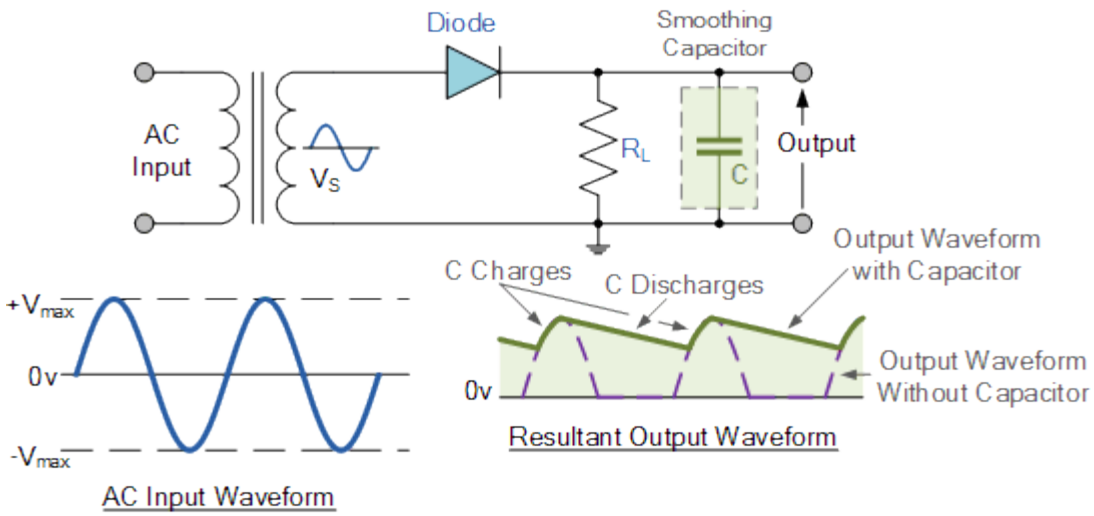

When rectification is used to provide a direct voltage (DC) power supply from an alternating (AC) source, the amount of ripple

voltage can be further reduced by using larger value capacitors but there are limits both on cost and size to the types of smoothing capacitors used.

For a given capacitor value, a greater load current (smaller load resistance) will discharge the capacitor more quickly (RC Time Constant) and so increases the ripple obtained. Then for single phase, half-wave rectifier circuit using a power diode it is not very practical to try and reduce the ripple voltage by capacitor smoothing alone. In this instance it would be more practical to use “Full-wave Rectification” instead.

In practice, the half-wave rectifier is used most often in low-power applications because of their major disadvantages being. The output amplitude is less than the input amplitude, there is no output during the negative half cycle so half the power is wasted and the output is pulsed DC resulting in excessive ripple.

Zener diode

Zener Diode or “Breakdown Diode”, as they are sometimes referred too, are basically the same as the standard PN junction diode but they are specially designed to have a low and specified **Reverse Breakdown Voltage** which takes advantage of any reverse voltage applied to it.

The **Zener diode** behaves just like a normal general-purpose diode consisting of a silicon PN junction and when biased in the forward direction, that is Anode positive with respect to its Cathode, it behaves just like a normal signal diode passing the rated current.

However, unlike a conventional diode that blocks any flow of current through itself when reverse biased, that is the Cathode becomes more positive than the Anode, as soon as the reverse voltage reaches a pre-determined value, the zener diode begins to conduct in the reverse direction.

This is because when the reverse voltage applied across the zener diode exceeds the rated voltage of the device a process called *Avalanche Breakdown* occurs in the semiconductor depletion layer and a current starts to flow through the diode to limit this increase in voltage.

The current now flowing through the zener diode increases dramatically to the maximum circuit value (which is usually limited by a series resistor) and once achieved, this reverse saturation current remains fairly constant over a wide range of reverse voltages. The voltage point at which the voltage across the zener diode becomes stable is called the “zener voltage”, (Vz) and for zener diodes this voltage can range from less than one volt to a few hundred volts.

The point at which the zener voltage triggers the current to flow through the diode can be very accurately controlled (to less than 1% tolerance) in the doping stage of the diodes semiconductor construction giving the diode a specific *zener breakdown voltage*, (Vz) for example, 4.3V or 7.5V. This zener breakdown voltage on the I-V curve is almost a vertical straight line.

Zener Diode I-V Characteristics

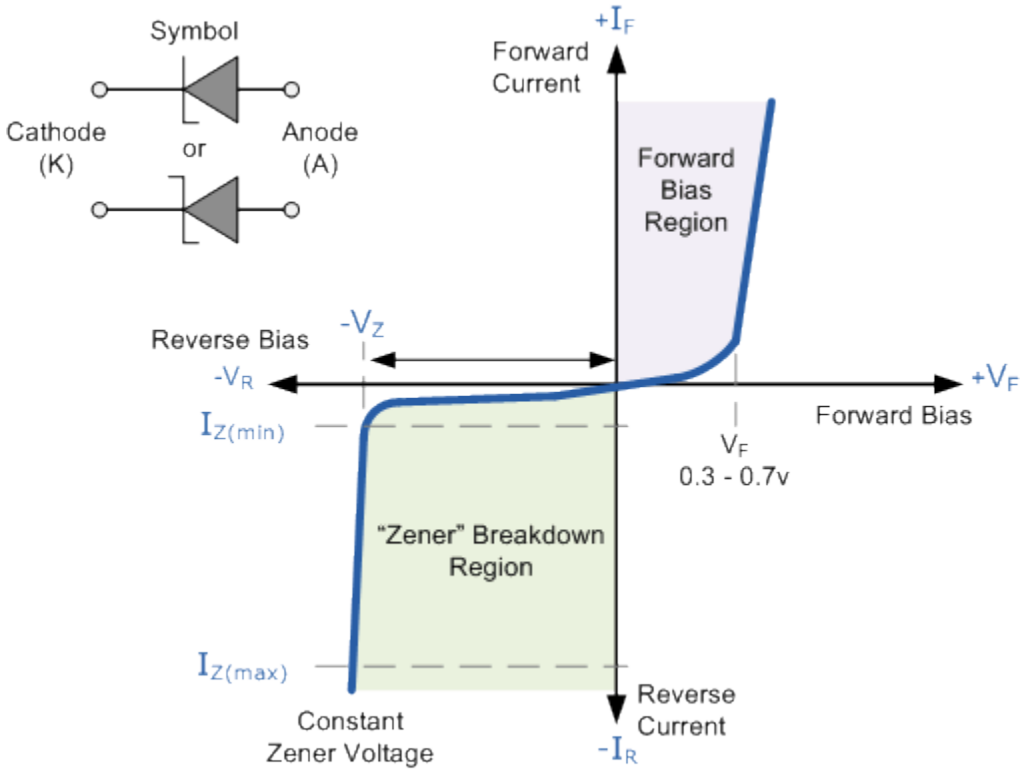

The **Zener Diode** is used in its "reverse bias" or reverse breakdown mode, i.e. the diodes anode connects to the negative supply. From the I-V characteristics curve above, we can see that the zener diode has a region in its reverse bias characteristics of almost a constant negative voltage regardless of the value of the current flowing through the diode.

This voltage remains almost constant even with large changes in current providing the zener diodes current remains between the breakdown current $I_{Z(min)}$ and its maximum current rating $I_{Z(max)}$.

This ability of the zener diode to control itself can be used to great effect to regulate or stabilise a voltage source against supply or load variations. The fact that the voltage across the diode in the breakdown region is almost constant turns out to be an important characteristic of the zener diode as it can be used in the simplest types of voltage regulator applications.

The function of a voltage regulator is to provide a constant output voltage to a load connected in parallel with it in spite of the ripples in the supply voltage or variations in the load current. A zener diode will continue to regulate its voltage until the diodes holding current falls below the minimum $I_{Z(min)}$ value in the reverse breakdown region.

The Zener Diode Regulator

Zener Diodes can be used to produce a stabilised voltage output with low ripple under varying load current conditions. By passing a small current through the diode from a voltage source, via a suitable current limiting resistor (R_S), the zener diode will conduct sufficient current to maintain a voltage drop of Vout.

We remember from the previous tutorials that the DC output voltage from the half or full-wave rectifiers contains ripple superimposed onto the DC voltage and that as the load value changes so to does the average output voltage. By connecting a simple zener stabiliser circuit as shown below across the output of the rectifier, a more stable output voltage can be produced.

Zener Diode Regulator

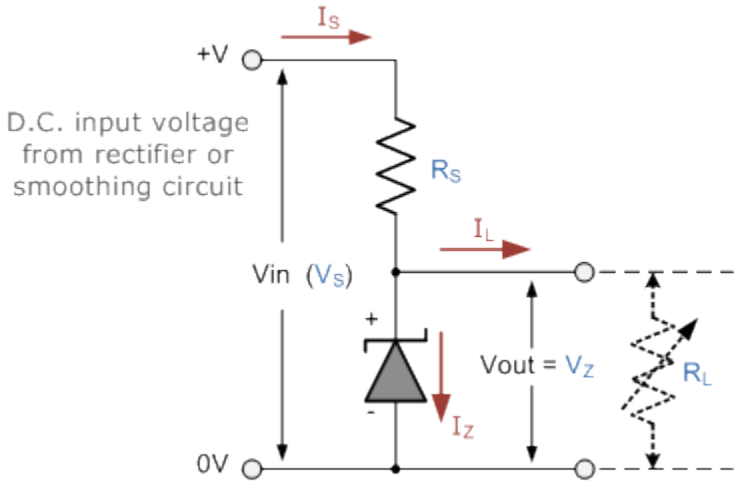

Resistor, R_S is connected in series with the zener diode to limit the current flow through the diode with the voltage source, V_S being connected across the combination. The stabilised output voltage V_{out} is taken from across the zener diode.

The zener diode is connected with its cathode terminal connected to the positive rail of the DC supply so it is reverse biased and will be operating in its breakdown condition. Resistor R_S is selected so to limit the maximum current flowing in the circuit.

With no load connected to the circuit, the load current will be zero, ($I_L = 0$), and all the circuit current passes through the zener diode which in turn dissipates its maximum power. Also a small value of the series resistor R_S will result in a greater diode current when the load resistance R_L is connected and large as this will increase the power dissipation requirement of the diode so care must be taken when selecting the appropriate value of series resistance so that the zener's maximum power rating is not exceeded under this no-load or high-impedance condition.

The load is connected in parallel with the zener diode, so the voltage across R_L is always the same as the zener voltage, ($V_R = V_Z$). There is a minimum zener current for which the stabilisation of the voltage is effective and the zener current must stay above this value operating under load within its breakdown region at all times. The upper limit of current is of course dependant upon the power rating of the device. The supply voltage V_S must be greater than V_Z.

One small problem with zener diode stabiliser circuits is that the diode can sometimes generate electrical noise on top of the DC supply as it tries to stabilise the voltage. Normally this is not a problem for most applications but the addition of a large value decoupling capacitor across the zener's output may be required to give additional smoothing.

Then to summarise a little. A zener diode is always operated in its reverse biased condition. As such a simple voltage regulator circuit can be designed using a zener diode to maintain a constant DC output voltage across the load in spite of variations in the input voltage or changes in the load current.

The zener voltage regulator consists of a current limiting resistor R_S connected in series with the input voltage V_S with the zener diode connected in parallel with the load R_L in this reverse biased condition. The stabilised output voltage is always selected to be the same as the breakdown voltage V_Z of the diode.

Zener Diode Example No1

A 5.0V stabilised power supply is required to be produced from a 12V DC power supply input source. The maximum power rating P_Z of the zener diode is 2W. Using the zener regulator circuit above calculate:

a). The maximum current flowing through the zener diode.

$$\text{Maximum Current} = \frac{\text{Watts}}{\text{Voltage}} = \frac{2\text{w}}{5\text{v}} = 400\text{mA}$$

b). The minimum value of the series resistor, R_S

$$R_S = \frac{V_S - V_Z}{I_Z} = \frac{12 - 5}{400\text{mA}} = 17.5\Omega$$

c). The load current I_L if a load resistor of 1kΩ is connected across the zener diode.

$$I_L = \frac{V_Z}{R_L} = \frac{5\text{v}}{1000\Omega} = 5\text{mA}$$

d). The zener current I_Z at full load.

$$I_Z = I_S - I_L = 400mA - 5mA = 395mA$$

Zener Diode Voltages

As well as producing a single stabilised voltage output, zener diodes can also be connected together in series along with normal silicon signal diodes to produce a variety of different reference voltage output values as shown below.

Zener Diodes Connected in Series

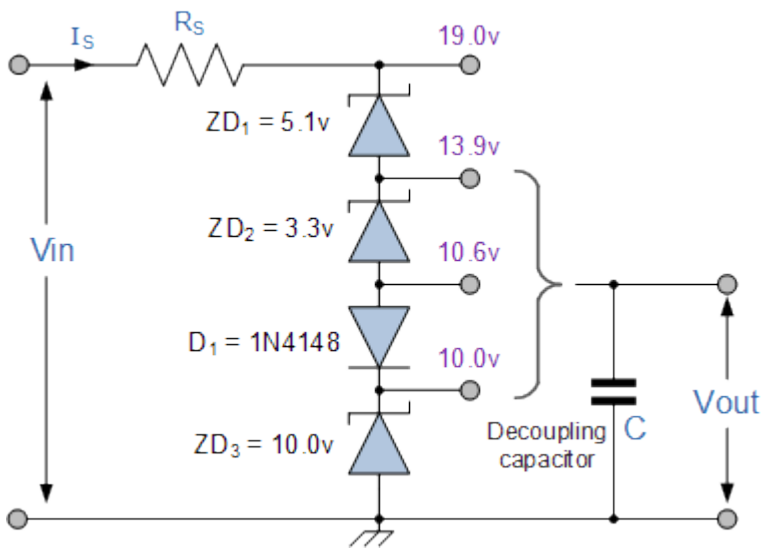

The values of the individual Zener diodes can be chosen to suit the application while the silicon diode will always drop about 0.6 – 0.7V in the forward bias condition. The supply voltage, Vin must of course be higher than the largest output reference voltage and in our example above this is 19v.

A typical **zener diode** for general electronic circuits is the 500mW, *BZX55* series or the larger 1.3W, *BZX85* series were the zener voltage is given as, for example, *C7V5* for a 7.5V diode giving a diode reference number of *BZX55C7V5*.

The 500mW series of zener diodes are available from about 2.4 up to about 100 volts and typically have the same sequence of values as used for the 5% (E24) resistor series with the individual voltage ratings for these small but very useful diodes are given in the table below.

Zener Diode Standard Zener Voltages

BZX55 Zener Diode Power Rating 500mW							
2.4V	2.7V	3.0V	3.3V	3.6V	3.9V	4.3V	4.7V
5.1V	5.6V	6.2V	6.8V	7.5V	8.2V	9.1V	10V
11V	12V	13V	15V	16V	18V	20V	22V
24V	27V	30V	33V	36V	39V	43V	47V
BZX85 Zener Diode Power Rating 1.3W							
3.3V	3.6V	3.9V	4.3V	4.7V	5.1V	5.6	6.2V
6.8V	7.5V	8.2V	9.1V	10V	11V	12V	13V
15V	16V	18V	20V	22V	24V	27V	30V
33V	36V	39V	43V	47V	51V	56V	62V

Zener Diode Clipping Circuits

Thus far we have looked at how a zener diode can be used to regulate a constant DC source but what if the input signal was not steady state DC but an alternating AC waveform how would the zener diode react to a constantly changing signal.

Diode clipping and clamping circuits are circuits that are used to shape or modify an input AC waveform (or any sinusoid) producing a differently shape output waveform depending on the circuit arrangement. Diode clipper circuits are also called limiters because they limit or clip-off the positive (or negative) part of an input AC signal. As zener clipper circuits limit or cut-off part of the waveform across them, they are mainly used for circuit protection or in waveform shaping circuits.

For example, if we wanted to clip an output waveform at +7.5V, we would use a 7.5V zener diode. If the output waveform tries to exceed the 7.5V limit, the zener diode will “clip-off” the excess voltage from the input producing a waveform with a flat top still keeping the output constant at +7.5V. Note that in the forward bias condition a zener diode is still a diode and when the AC waveform output goes negative below -0.7V, the zener diode turns “ON” like any normal silicon diode would and clips the output at -0.7V as shown below.

Square Wave Signal

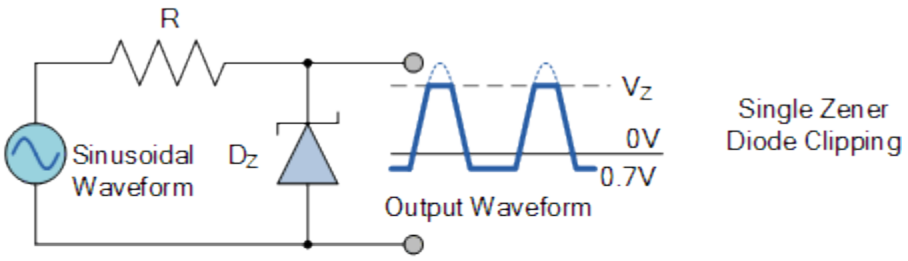

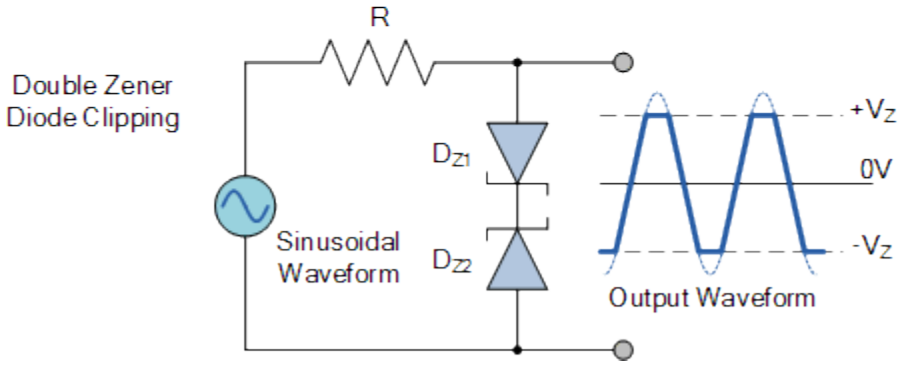

The back to back connected zener diodes can be used as an AC regulator producing what is jokingly called a “poor man’s square wave generator”. Using this arrangement we can clip the waveform between a positive value of +8.2V and a negative value of -8.2V for a 7.5V zener diode.

So for example, if we wanted to clip an output waveform between two different minimum and maximum values of say, +8V and -6V, we would simply use two differently rated zener diodes. Note that the output will actually clip the AC waveform between +8.7V and -6.7V due to the addition of the forward biasing diode voltage.

In other words a peak-to-peak voltage of 15.4 volts instead of expected 14 volts, as the forward bias volt drop across the diode adds another 0.7 volts in each direction.

This type of clipper configuration is fairly common for protecting an electronic circuit from over voltage. The two zener’s are generally placed across the power supply input terminals and

during normal operation, one of the zener diodes is “OFF” and the diodes have little or no affect. However, if the input voltage waveform exceeds its limit, then the zener’s turn “ON” and clip the input to protect the circuit.

HALF WAVE RECTIFIER WITH +VE & -VE SUPPLY

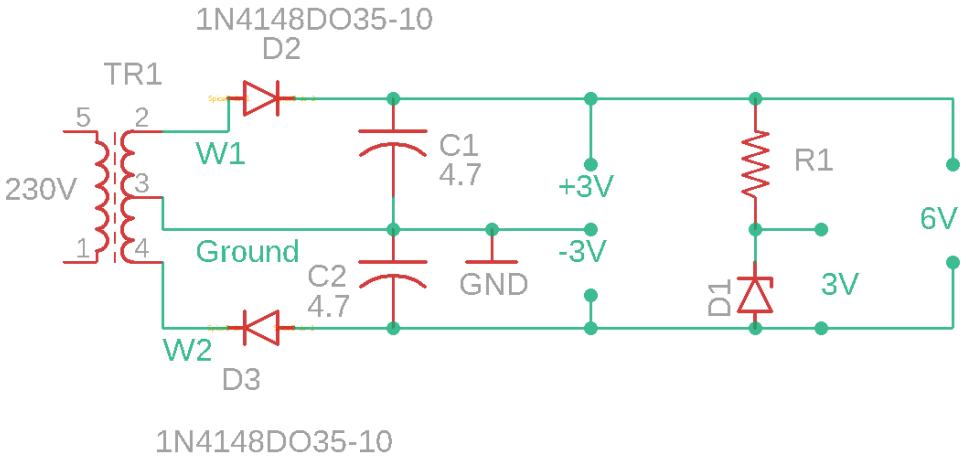

Here the o/p of D2 with respect to ground is +3 V & and o/p of D3 with respect to ground is -3V.

Across D2 & D3 we get 6V

From the 6V we use zener regulator consisting of R1 & D1 giving 3V.